Technical Data

Product: KLUDI PURE&EASY, Care
single lever basin mixer 70, DN 15

Article-Nr.: 372870565

Surface: 05 chrome

Product description

manufacterer KLUDI GmbH & Co. KG
Typ: KLUDI PURE&EASY, Care,
single lever basin mixer 70,
DN 15/ PN 10
Art. Nr. 372870565
basin mixer
single lever mixer
single hole mounted
solid clinic lever, metal
aerator M24
ceramic cartridge with hotwater safety device
flow rate at 3 bar = 7 l/ min.
flexible hoses G 3/8 DVGW approved
rapid installation set
retractable chain

Product Picture

Dimensional drawing

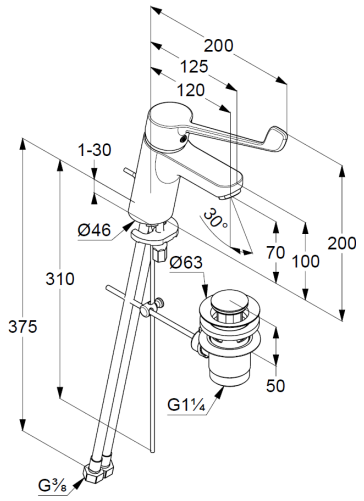

Flow rate diagram

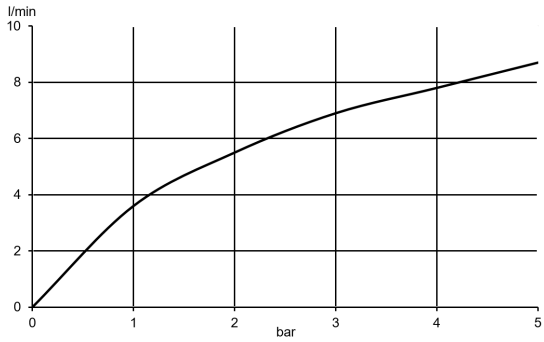

KLUDI
WATER IN PERFECTION